Arc

Bath Shower Mixer

Article no.:	291007400	**EAN no.:**	5708516726821
Finish:	Chrome/Black		
Series:	Arc		

Standard features:

Ceramic cartridge
Standard 150mm centres
Scalding protection (38ºC)
Hydro-ceramic cartridge
With wall plates & eccentric unions
Diverts automatically when spout is folded away
1/2" connection for hand shower hose
Eco-Click water saving feature

Product features

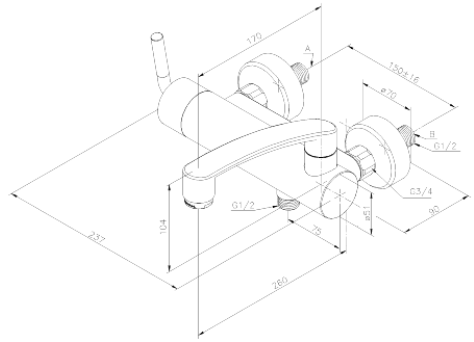

FM Mattsson Mora Group Denmark
Abildager 26 A, 2605 Brøndby, Denmark
Østbirkvej 2, 5240 Odense NØ, Denmark

+45 63 10 22 10 danmark@fmm-mora.com

For more information please visit www.damixa.com

damixa