Tradition

3-Hole Basin Mixer with pop up waste

Article no.:	370780000	**EAN no.:**	5708516559849
Finish:	Chrome		
Series:	Tradition		

Standard features:

Ceramic head part
Pop up waste
Water consumption max.12 l/min

Product features

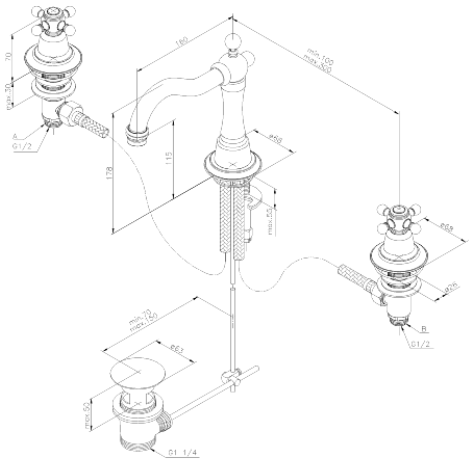

FM Mattsson Mora Group Denmark
Abildager 26 A, 2605 Brøndby, Denmark
Østbirkvej 2, 5240 Odense NØ, Denmark

+45 63 10 22 10 danmark@fmm-mora.com

For more information please visit www.damixa.com

damixa