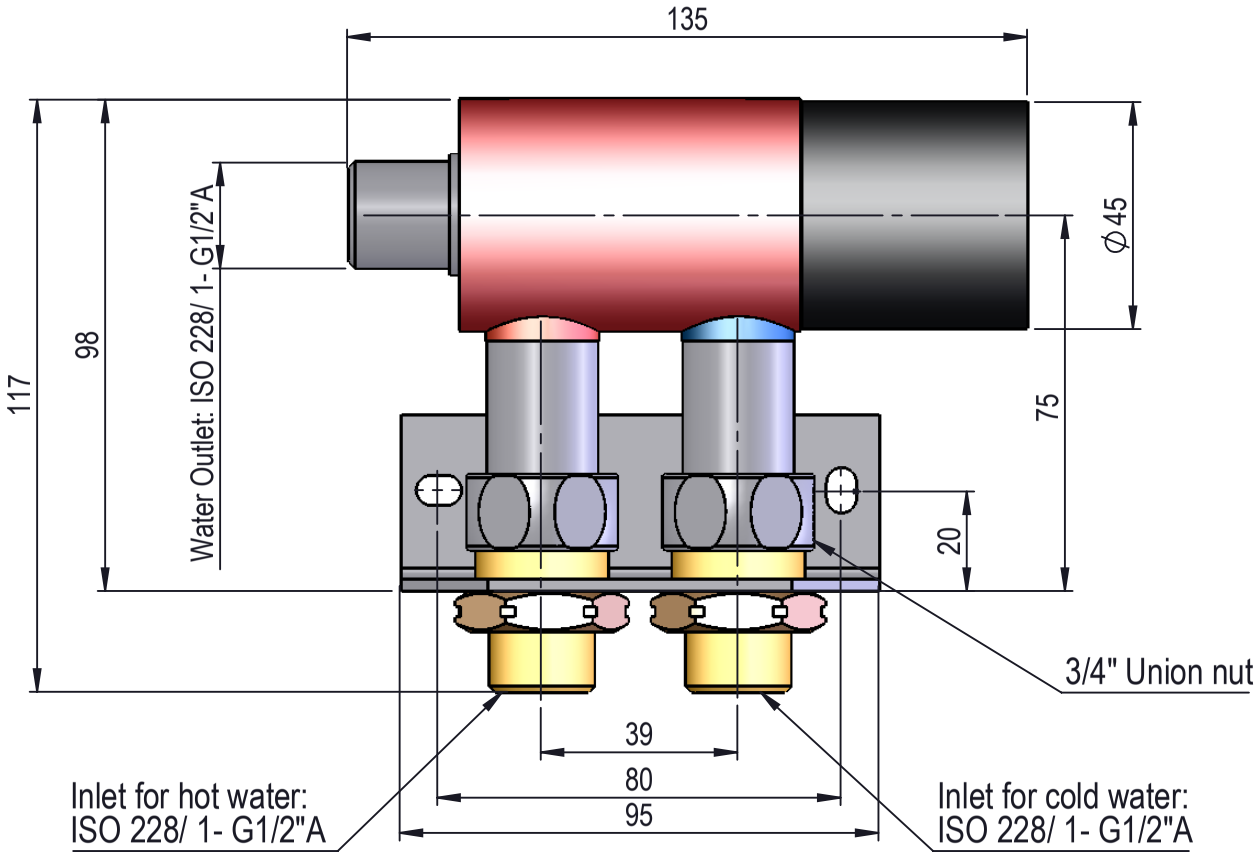

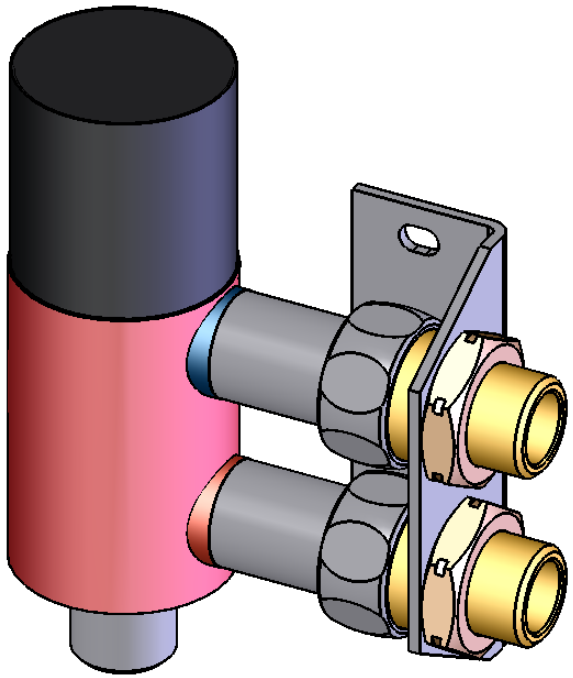

Description:	Thermostatic mixing valve
Media:	Hot and cold water
Material:	
Specification:	Temperature Set at 22°
Comments:	Special edition for Eyeshowers
Drawing type:	Customer drawing
Weight:	0.578 Kg

All dimensions maked with ⬭ are inspection dimensions

Unspecified liniar tolerances:	Unspecified angular tolerances:
ISO2768-M	ISO2768-M

Rev.	Pos.	Date	TM No.	Design by	Drawn by:	Change:

Designed by:	Drawn by:	Released on TM No.	Date:
	AAH		04-03-16

Format:	Drawing No.:
A4	17140039C

BROEN-LAB

This drawing is our property and cannot be given to a third party, copied or otherwise used without our permission. BROEN-LAB A/S.