Lyra

Shower Mixer

Article no.:	512000000	**EAN no.:**	5708516714118
Finish:	Chrome		
Series:	Lyra		

Standard features:

Ceramic cartridge
Standard 150mm centres
With wall plates & eccentric unions
1/2" connection for hand shower hose

Product features

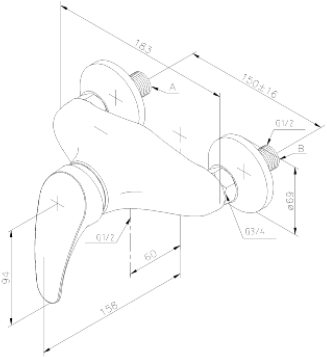

FM Mattsson Mora Group Denmark
Abildager 26 A, 2605 Brøndby, Denmark
Østbirkvej 2, 5240 Odense NØ, Denmark

+45 63 10 22 10 danmark@fmm-mora.com

For more information please visit www.damixa.com

damixa