Pine

Basin Mixer

Article no.:	1763000	**EAN no.:**	
Finish:	Chrome		
Series:	Pine		

Standard features:

120° swivel limitation
Ceramic cartridge
6l/min aerator

Product features

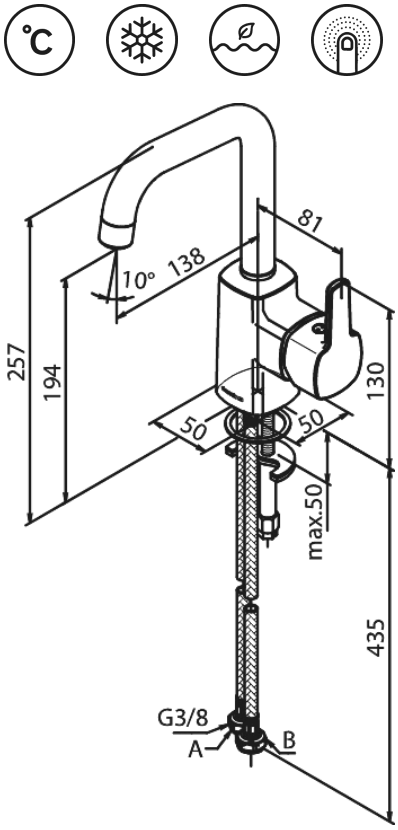

FM Mattsson Mora Group Denmark
Østbirkvej 2, DK-5240 Odense NØ

+45 88 33 00 34 damixa-international@fmm-mora.com

Mere information på https://damixa.com

damixa