Rowan

3-Hole Bath Shower Mixer

Article no.:	670130000	**EAN no.:**	5708516809012
Finish:	Chrome		
Series:	Rowan		

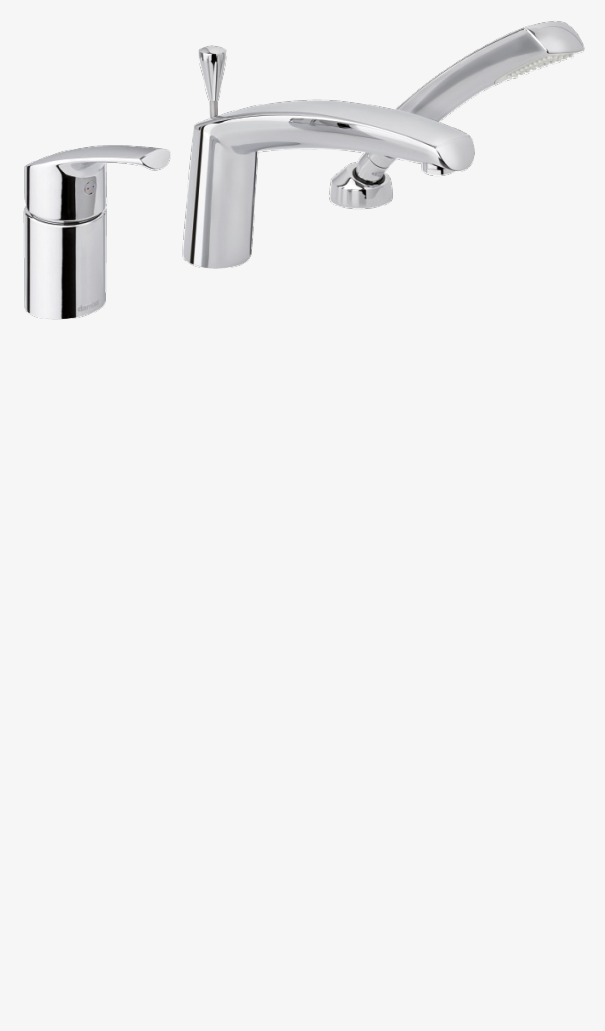

Standard features:

Ceramic cartridge
Hydro-ceramic cartridge
1 spray mode
With diverter
Rub-clean aerator

Product features

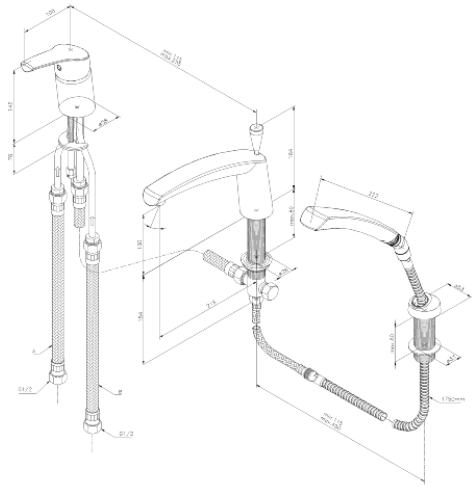

FM Mattsson Mora Group Denmark
Abildager 26 A, 2605 Brøndby, Denmark
Østbirkvej 2, 5240 Odense NØ, Denmark

+45 63 10 22 10 danmark@fmm-mora.com

For more information please visit www.damixa.com

damixa