Tradition

Basin Mixer with pop up waste

Article no.:	376210000	**EAN no.:**	5708516812234
Finish:	Chrome		
Series:	Tradition		

Standard features:

Ceramic cartridge
Scalding protection (38ºC)
Swivel spout
Pop up waste with click function
Rub-clean aerator
Cold-start
Eco-Save water saving feature
1 handle
Water consumption max.12 l/min

Product features

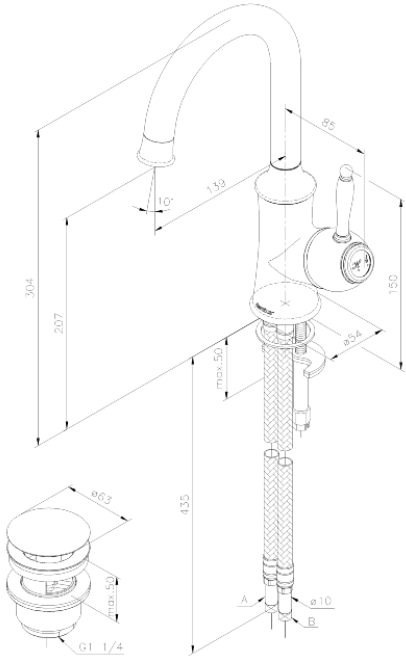

FM Mattsson Mora Group Denmark
Abildager 26 A, 2605 Brøndby, Denmark
Østbirkvej 2, 5240 Odense NØ, Denmark

+45 63 10 22 10 danmark@fmm-mora.com

For more information please visit www.damixa.com

damixa